Krauss Maffei

Engineering Passion

LFI Technology
Long Fiber Injection + In-Mold Coating or In-mold Primer

KraussMaffei

LFI with In-Mold Coating or In-Mold Primer

Process

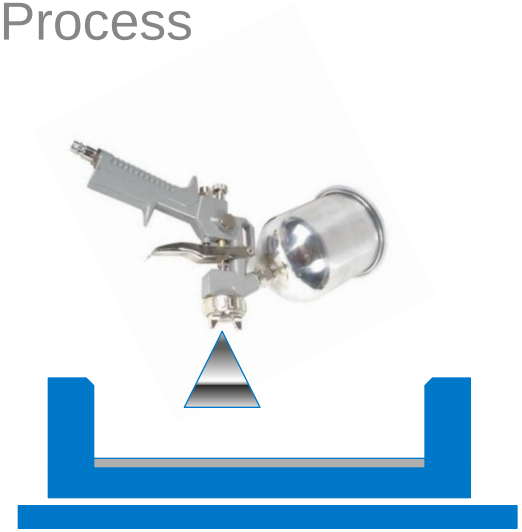

1. Spray IMC or Primer

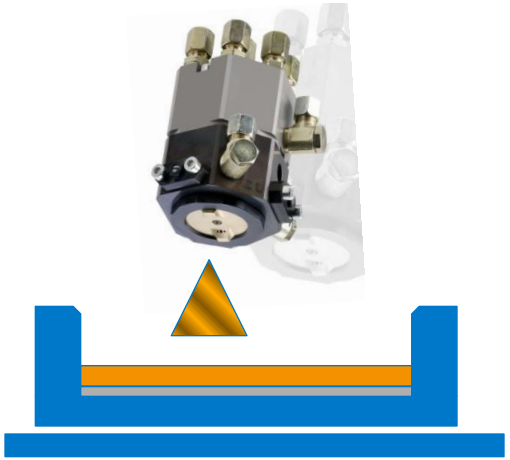

2. Spray PU Barrier Coating

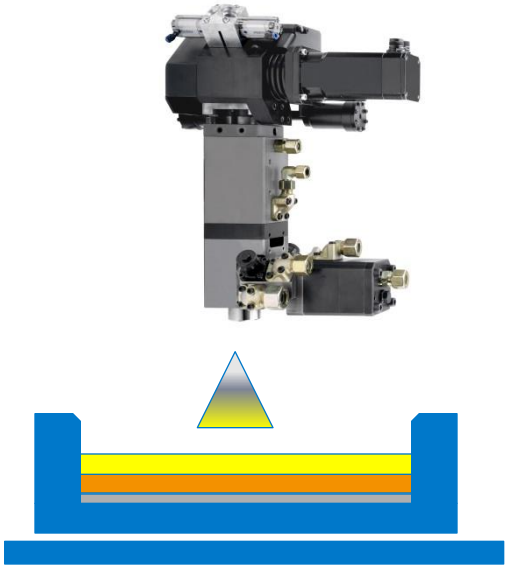

3. PU LFI-Injection

4. Compression and reaction in closed mold

5. Demolding

6. Spray Clear Coating or Final Painting

KraussMaffei

LFI with In-Mold Coating or In-Mold Primer

Part properties

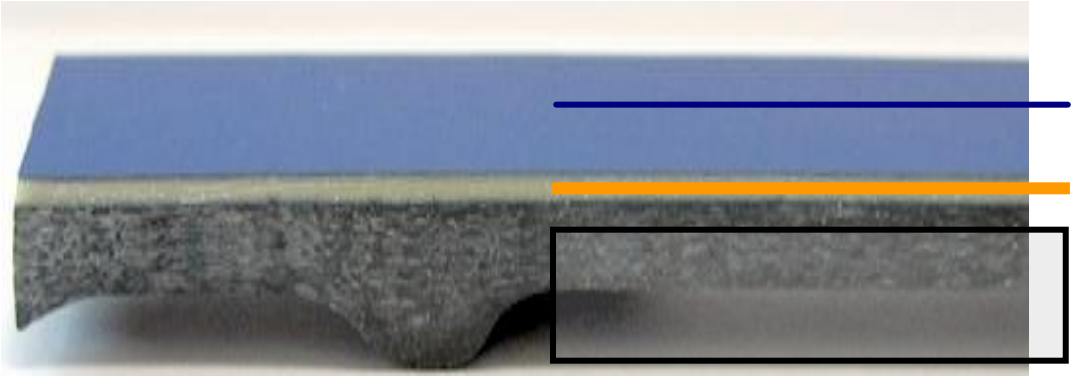

In-mold paint or primer: 35-50 micron

Rigid barrier coating layer: from 0.5 to 1.5 mm

Long glass fiber composite 3.0 – 5.0 mm

				Flexural Test			Tensile Test		Impact Test	
Description	Density gr/l	Fiber glass %	Hardness Shore D	Max Strength MPa	Deflection mm	Young Modulus MPa	Max Strength MPa	Elongation %	Energy absorbed (J)	Impact Energy (KJ/m^2)
Rigid layer (0.5 mm) and LFI	1300	35	80	179	9.0	6395	135	2.57	1.69	54.45
Rigid layer	1050	-	78	81	8.8	2152	-	-	0.21	14.40

LFI with In-Mold Coating or In-Mold Primer

Cycle time

Schematic of a typical LFI / IMC process	
1. Spray self releasing IMC or Primer into the mold	Depending on part size
2. Flash off time for IMC or Primer	30 - 90 sec
3. Spray PU Barrier coating	60 - 120 sec
4. PU LFI-Injection	30 – 60 sec
5. Reaction time into closed mold until demolding	300-600 sec

Target cycle time 5 – 10 minutes / part

KraussMaffei

LFI In-Mold Painting

Process parameters

Based on customer trials			
	BASF	**Rühl**	**DOW**
Barrier Coating	Poly (Elastocoat C6301 /105) Iso (PMDI 92140)	Poly (EP3570 schwarz) Iso (puronate® 910)	Poly (Barrier Coating Polyol 1) Iso (Voraforce TL 1600)
Mixing ratio	100:100	100:144	100:122
Output rate	16 g/sec	16 g/sec	16 g/sec
Process temp at MH	Poly 41°C Iso 35°C	Poly 44°C Iso 42°C	Poly 45°C Iso 40°C
LFI	Poly (3851/104 ohne Kat) Iso (PMDI 92140)	Poly (Rühl puropreg 562 L) Iso (puronate 900)	Poly (TL1655) Iso (Voraforce TL 1600)
Mixing ratio	100:160	100:160	100:190
Output rate	425 g/sec	425 g/sec	425 g/sec
Glas content	25% with 12,5mm	25% with 12,5mm	25% with 12,5mm
Process temp at MH	Poly 34°C Iso 30°C	Poly 38°C Iso 35°C	Poly 30°C Iso 30°C
Tool temp	Upper tool 67°C Lower tool 64°C	Upper tool 66°C Lower tool 64°C	Upper tool 66°C Lower tool 64°C
Clamping force	250t	250t	250t

LFI with In-Mold Coating or In-Mold Primer

Feature | Advantage | Benefit

- Solvent or water based coatings could be used
- Self releasing IMC or Primer, no need for external mold release agents. (therefore very high gloss possible. Tool cleaned with Aceton in advance)
- Resistance and quality comparable to automotive industry
- Wide range of colors available (solid colors and metallics)
- Excellent chemical and mechanical performance due to chemical bond with the PU-substrate
- Short cycle time 5 – 10 min.
- Online or electrostatic painting (paintable CFRP part)

➡ High stability, dimensional and fitting accuracy at low weight for large-scale composite parts

➡ Flexible color and surface choice

In-Mold Coating or In-Mold Primer

Right choice of material

2K – IMC – Top Coating

To apply the final painting directly in the tool. An additional clear coating could be applied afterwards to improve the surface quality

2K – IMC – Primer

To get a paintable LFI part out of the tool and
using an existing painting line

KraussMaffei

Tractor engine hood SAME DEUTZ FAHR GROUP

FCS
Fujichem Sonneborn Limited

DOW®

KraussMaffei

John Deere Roof for Harvester by Romeo Rim USA

KraussMaffei

covestro

Personal Watercrafts by Camoplast USA or Honda Japan

KraussMaffei

Bus Rear Cover by NCC Russia

FCS
Fujichem Sonneborn Limited

DOW®

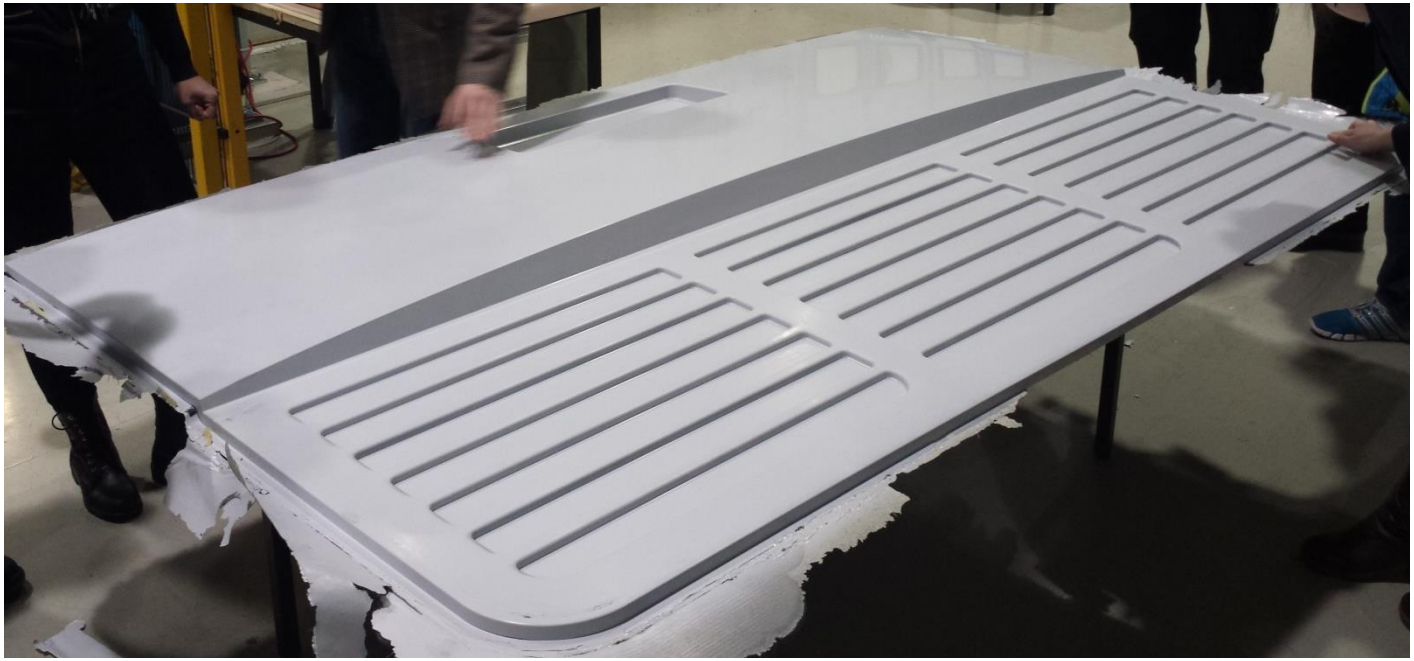

KraussMaffei

Engineering Passion

Success Story :
Rear Cover for Electric Bus by NCC Russia

Production of a two-colored, self-supporting composite structure

http://www.evopro-group.com/eng/nodes/view/839

KraussMaffei

From the idea to the final part : LFI In-Mold Painting

Project was realized after 3 Years

2012 First contact to search for the right technology to produce exterior parts for trucks or buses

2012 KraussMaffei suggested LFI and provided the mechanical properties and more input like

- Tensile strength
- Tensile modulus
- Elongation
- Impact resistance
- Shrinkage
- Water absorption
- Temperature resistance
- Expected cycle time
- Expected material costs

2012 Customer compared LFI with other technologies like SMC or DCPD.

- Invest for tools and presses is lower than SMC
- Weight of parts is lower then SMC, because density is approx 55% lower (Ref. Romeo Rim)
- Combination with In-Mold Coating or Primer is possible to achieve perfect painted parts
- Economical for a lower production volume

KraussMaffei

From the idea to the final part : LFI In-Mold Painting

Project was realized after 3 Years

2013 KraussMaffei provided layout proposal and quotation

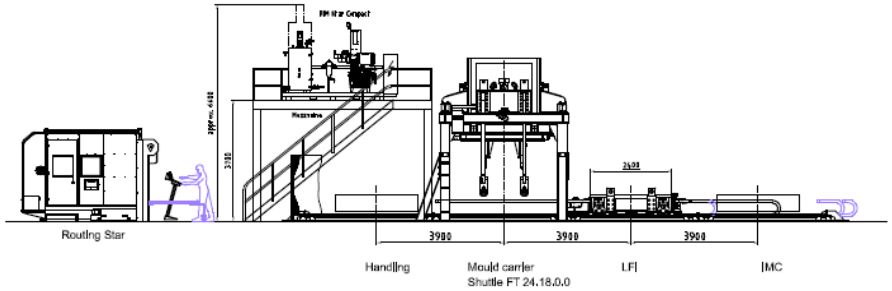

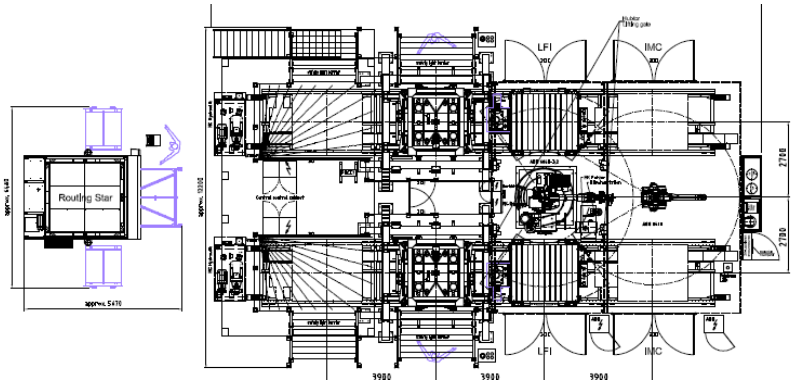

2013 Customer conducted competitive comparison on

- output rates,
- flexibility,
- part properties,
- mixing quality,
- different fibrer lenghts,
- process know-how,
- software features

KraussMaffei

From the idea to the final part : LFI In-Mold Painting

Project was realized after 3 Years

2014 Involvement of company b+m to define the autom. IMP to be integrated into the turnkey solution

2014 NCC invested in an aluminium prototype tool and ran trials at the KraussMaffei lab in Munich

2014 KraussMaffei process and tooling department analized the part and made some redesign recomendations for the production process

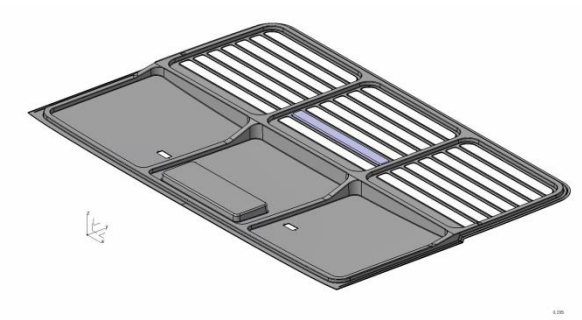

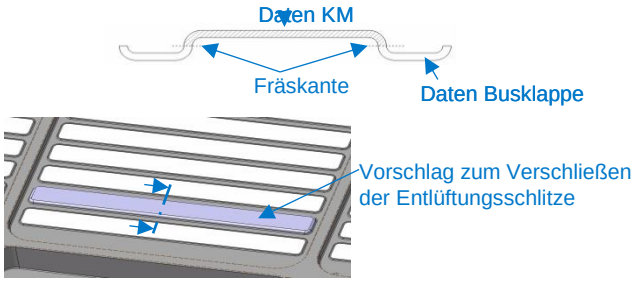

KraussMaffei

From the idea to the final part : LFI In-Mold Painting

Project was realized after 3 Years

2014 KraussMaffei, Dow and Sonneborn produced 30 prototype parts, which were successfully tested by the customer

KraussMaffei

From the idea to the final part : LFI In-Mold Painting

Project was realized after 3 Years

2015 Installation of turnkey solution in Moscow

NCC Nano Composite Centre
Country: Russia

KM scope of supply
LFI Shuttle Mold Carrier w. 4 Stations
In-Mould Painting Spray Equipment (b+m)
Barrier Coating RSC 4/4 w. spray
LFI RSC 16/40 w. LFI
LFI Tool for bus rear cover

KraussMaffei

From the idea to the final part : LFI In-Mold Painting

Project was realized after 3 Years

2016 Customer NCC Russia won the JEC award for their composite bus design

LFI with In-Mold Coating or In-Mold Primer

Material Supplier Partner

IMC Topcoat and Primer

FCS Fujichem Sonneborn Limited

SHERWIN WILLIAMS.

PU System for LFI and Barrier Coating

DOW®

covestro

RÜHL PUROMER GmbH

BASF The Chemical Company

Glass Fiber Rovings

OWENS CORNING

JM Johns Manville

KraussMaffei

Engineering Passion

Vielen Dank für Ihre Aufmerksamkeit!